the exciting coil with the vibrating interrupter is replaced by one of the improved circuit breakers to which reference has been made.

This device comprises a casting *A* with a protruding sleeve *B*, which in a bushing supports a freely rotatable shaft *a*. The latter carries an armature within a stationary field magnet *M* and on the top, a hollow iron pulley *D*, which contains the break proper. Within the shaft *a*, and concentrically with the same, is placed a smaller shaft *b*, likewise freely movable on ball-bearings and supporting a weight *E*. This weight being on one side and the shafts *a* and *b* inclined to the vertical, the weight remains stationary as the pulley is rotated. Fastened to the weight *E* is a device *R* in the form of a scoop with very thin walls, narrow on the end nearer to the pulley and wider on the other end. *A* small quantity of mercury being placed in the pulley and the latter rotated against the narrow end of the scoop, a portion of the fluid is taken up and thrown in a thin and wide stream towards the centre of the pulley. The top of the latter is hermetically closed by an iron washer, as shown, this washer supporting on a steel rod *L* a disk *F* of the same metal provided with a number of thin contact blades *K*. The rod *L* is insulated by washers *N* from the pulley, and for the convenience of filling in the mercury a small screw *o* is provided. The bolt *L* forming one terminal of the circuit breaker is connected by a copper strip to the primary *p*. The other end of the primary coil leads to one of the terminals of the condenser *C*, contained in a compartment of a box *A*, another compartment of the same being reserved for switch *S* and terminals of the instrument. The other terminal of the condenser is connected to the casting *A* and through it to pulley *D*. When the pulley is rotated, the contact blades *K* are brought rapidly in and out of contact with the stream of mercury, thus closing and opening the circuit in quick succession. With such a device it is easy to obtain ten thousand makes and breaks per second and even more. The secondary *a* is made of two separate coils and so arranged that it can be slipped out, and a metal strip in its middle connects it to the primary coil. This is done to prevent the secondary from breaking down when one of the terminals is overloaded, as it often happens in working Röntgen bulbs. This form of coil will withstand a very much greater difference of potential than coils as ordinarily constructed.

The motor has both field and armature built of plates, so that it can be used on alternating as well as direct current supply circuits, and the shafts are as nearly as possible vertical, so as to require the least care in oiling. Thus, the only thing which really requires some attention is the commutator of the motor, but where alternating currents are always available, this source of possible trouble is easily done away with.

The circuit connections of the instrument have been already shown and the mode of operation explained in periodicals. The usual manner of connecting is illustrated in figure 8, in which A_2A_2 are the terminals of the supply circuit, *L*, a self-induction coil for raising the pressure, which is connected in series with condenser *C* and primary *PP*. The remaining letters designate the parts correspondingly marked in figure 9 and will be understood with reference to the latter.

6.

LECTURE BEFORE THE NEW YORK ACADEMY OF SCIENCE, APRIL 6, 1897*

Ladies & Gentlemen:

You will still remember vividly, no doubt, the excitement which a year ago was caused by the announcement of the discoveries of Prof. Röntgen. Suddenly, without any preparation, Röntgen surprised the world with two wonderful results. He showed us how to take a photographic impression of an object invisible to the eye and, what seemed still more extraordinary, he enabled us, by the help of his luminous screen – now known as the fluoroscope – to see, with our own eyes, the outlines of the object. We are living in an age of exceptional intellectual activity, and important advances are often recorded, but these were almost of the order of the telescope and microscope and *such* discoveries come no more than once or twice in a century. Scarcely can any one of us hope to again witness in his lifetime an event of so wide-spread a scientific and popular interest. The desire to see things which seem forever hidden from sight is more or less strongly developed in every human being, through all degrees of this sentiment, from the idle curiosity of the unenlightened to the absorbing desire for knowledge of the highly refined, and this in itself was sufficient to engage universal attention; but, apart from this, these discoveries brought promise of relief to numberless sufferers and stirred all over the world the fibres of humanity. It is harldy necessary for me to tell you that the fever took hold of me also, but mine was a singular, grave case, and I have not recovered from its effects to this day. I hope you will pardon here a slight digression which I have a strong reason to make.

At the close of 1894, realizing the necessity of recovery from a straining task, on which I have been laboring for a number of years and which still commands my energies, it occurred to me to investigate the actinic action of phosphorescent bodies. The subject did not appear to have been studied, and I began the work at once, securing later, at the suggestion of some friends connected with the Century Magazine, the assitance of Messrs. Tonnele & Co., Artists' Photographers, of this City,

* A lecture delivered before the New York Academy of Science, April 6, 1897.

then doing work for this Magazine. In these experiments I employed an improved apparatus for the production of powerful electrical vibrations, as well as one of my high frequency alternators of old design. A great variety of Crookes tubes, single-electrode globes and vacuum bulbs without external electrodes were experimented upon. A surprising fact was soon brought to light; namely, that the actinic power of the Crookes bulbs varied greatly and that some, which emitted a comparatively strong luminosity, hardly showed an effect, while others, of much smaller light-giving power, produced strong impressions. I wish to state here, in order to be clear, that my efforts were directed towards investigating such actions of true phosphorescent light, as furnished from bulbs without appreciable emission of heat, and not so much those of incandescent vacuum tubes, although some photographs were likewise taken with these. As both the artists and myself were busy on other matters the plates in their ordinary holders were frequently put in some corner of the laboratory until a suitable opportunity for carrying on the experiments was found. During these investigations many plates gave a result, while many others failed, and on some of these both Mr. Alley, who then assisted me, and myself noted unaccountable marks and defects. Mr. Alley particularly found it extraordinary that, in spite of his care, many plates proved defective and unsuccessful. The taking of these photographic impressions by means of Crookes bulbs brought freshly to my mind the experiments of Lenard, some features of which, particularly the action on a sensitive plate, had fascinated me from the start, and I resolved to go over the ground covered by him with assistance and improved appliances. Just as my attention was arrested by this feature my laboratory with almost everything it contained was destroyed; and the few months following passed in intense activity which made me temporarily forget my projects. I had hardly finished the work of reconstruction and resumed the course of my ideas when the news of Röntgen's achievement reached me. Instantly the truth flashed upon my mind. I hurried to repeat his incompletely reported experiments, and there I beheld the wonder myself. Then – too late – I realized that my guiding spirit had again prompted me and that I had failed to comprehend his mysterious signs.

The statement of these facts might have been misinterpreted at the time of Prof. Röntgen's announcement, and I have kept silent, although I was unable to overcome entirely my feeling in the introductory lines of my first of a series of articles I wrote on this subject in the columns of the Electrical Review. Presently, however, I have no fear of a misunderstanding of my words, and I am recording my painful but stimulating experience solely to make some of those, who have lightly written about the history of this new art, more justly appreciate this new departure. I was quite well acquainted with the results of Lenard and naturally often thought of his beautiful and promising experiments, and yet the possibility of the plates being marked and spoiled by some action of the bulbs never presented itself to my mind. While some might see in this only an argument for my own short-sightedness, others, more kindly disposed towards me, will, with myself, consider it rather a demonstration of Goethe's great words, which I will not repeat in the text, but which say that, what Nature does not want to reveal to one's mind, one cannot force it from her with screws and levers.

But while I have failed to see what others in my place might have perceived, it was always since my conviction, which is now firmer than ever, that I have not been forsaken by the kind spirit who then communed with me, but that, on the contrary, he has further guided me and guided me right in the comprehension of the nature of these marvellous manifestations. Perhaps, in bringing to your attention some new facts which I have since discovered in addition to those already announced, I may induce, at least some of you, to interpret these phenomena as I do. For fear, though, that I might miss my chief object this evening, I must ask your kind indulgence to dwell in a few words on the novel appliances which are exhibited here for your inspection. When I trace their origin I find it clearly in my early recognition of the fact that an economical method of producing electrical vibrations of very high frequency was the key for the solution of a number of most important problems in science and industry. Insignificant as these machines may seem to you, they are nevertheless the result of labors extending through a number of years, and I can truthfully say that many times the difficulties which I have encountered in my endeavors to perfect them, have appeared to me so great as to almost deprive me of the courage to continue the work. When the experimenter has to spend several years of patient effort only to recognize that a mere microscopical cavity or air bubble in the esential parts of his apparatus is fatal to the attainment of the result sought for by him; when he has to find that his machine does not perform well because a wire he uses is a quarter of an inch too long or too short; when he notes that now a part of his apparatus when in action will grow colder in an apparently inexplicable way, and next that the same part will get overheated, though to all appearance the conditions are unchanged; when he makes puzzling observations at every step and ordinary instruments and methods of measurement are not available, then his progress is necessarily slow and his energies are severely taxed. Finally, I am glad to say, I have triumphed over at least the chief obstacles, and nothing of any serious consequence stands now in the way of obtaining electrical oscillations of frequencies up to a few milions a second from ordinary supply circuits with simple and fairly economical appliances. What this means I need not discuss. It will be duly-judged by those who have kept in touch with the development in this and allied fields. These machines you see are only a few of the types I have developed and as they stand here they are chiefly intended to replace the ordinary induction coil in its numerous uses.

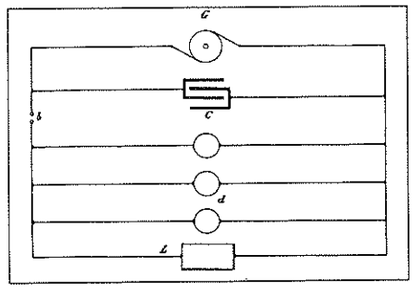

Fig. 1.

As to the broad principle underlying these transformers or electrical oscillators, as they might be most properly called, it is simple enough and has been advanced by me some five or six years ago. A condenser is charged from a suitable source and is then in any convenient way discharged through a circuit contain-

ing, as it does here, the primary of the transformer. The first diagram here, figure 1, illustrates a generator (*G*), a condenser (*C*) and for charging and discharging the latter any kind of device (*b*) adapted to produce an intermittent break in the dielectric. The circuit (*L*) containing the high or low tension device through which the condenser discharges being properly adjusted, extremely rapid electrical vibrations which, so far we know, are unattainable by any other means, result; and these set up by inductive action in any neighboring circuits similar vibrations which give rise to many curious phenomena. Having familiarized myself with these at the time when some laws governing them were not quite well understood, I have retained certain conceptions which I have then formed and which, though primitive, might stand even now in the light of our present advanced knowledge. I have linked a condenser

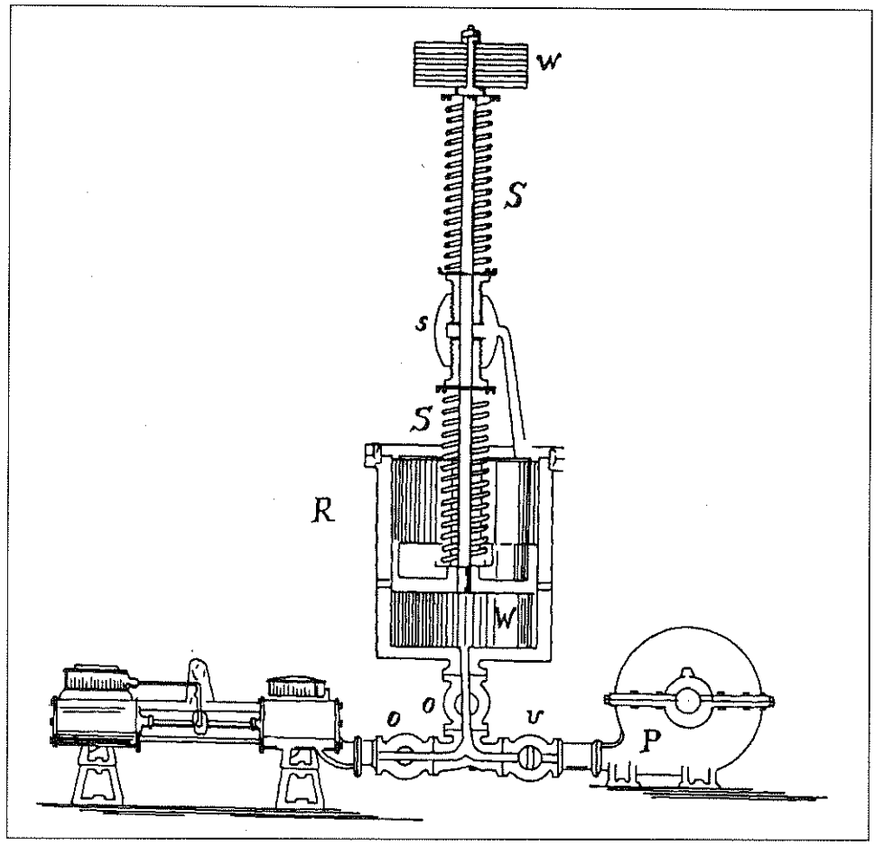

Fig. 2.

to a reservoir (*R*) into which by means of a pump (*P*) an incompressible fluid as water (*W*) is supplied through a feed-pipe (*p*), as illustrated in the second diagram, figure 2, the fluid representing electricity, the pump the generator and the feed-pipe the connecting wire. The rezervoir has a movable bottom (*B*), which is held up by a spring (*S'*) and opens the ports (*OO*) when the fluid in the vessel has reached a certain height and the pressure has become sufficient to overcome the elastic force of the spring. To complete the model adjustable weights *w*, a screw *s* for altering the tension of the spring and a valve *v* for regulating the flow of the fluid. With the giving away of the bottom the fluid in the reservoir acquires velocity and consequently momentum, which results in an increased pressure against the bottom, causing the latter to open wider, and more of the fluid rushes out than the feed-pipe can suply, whereupon the spring reasserts itself, closing again the ports, and the same process is repeated in more or less rapid succession. This opening and closing of the bottom may be linked to the making and breaking of the conducting path, the frictional resistance in this mechanical system to the ohmic resistance and, obviously, the inertia of the moving masses to the self induction of the electric circuit. Now it is evident that, in order to keep in action the mechanism without the employment of auxiliary means, the average rate of supply through the pipe must be inferior to the average rate of discharge through the bottom; for, if it be otherwise, the ports will simply remain open and no vibration will take place. The more nearly the average rate of supply equals the average rate of discharge the quicker will the bottom open and close; and it is furthermore clear from a consideration of simple mechanical principles that, if the fluid be supplied so fast through the feed-pipe that the bottom vibrates as it would of its own accord, then the amplitude of the vibration will be the largest, the pressure against the bottom the strongest and the greatest amount of fluid will be passed through the ports. All these considerations hold good for the electric circuit, and in experiments with high-frequency machines, in which these effects were purposely magnified with the view of rendering their observation more easy, I have found that that condition is fulfilled when the capacity, self-induction and frequency of vibration bear a certain relation, which observation I have since utilized in the adjustment of inductive circuits. You will note that this condition governing the rate of supply and discharge, most important in practice, especially when no positively acting mechanical means are employed for effecting the rupture of the dielectric, is a distinct one and should not be confounded with the condition determining the oscillatory character of the discharge investigated long ago by Lord Kelvin.

The next step in the evolution of the principle and its adaptation to practical uses was to associate with the system illustrated in figure 3 a self-induction coil *L*, as shown in diagram, figure 3, which modified the action in many now well-understood ways. In a simplified form of this arrangement the condenser, as a distinctive part of the system, was done away with, the necessary capacity being given to the coil itself, and for this purpose the turns of the latter were wound as illustrated in figure 4, so as to allow the storage of the proper and generally the largest possible amount of energy. Then I associated a secondary coil *S'* with the primary circuit *P*,

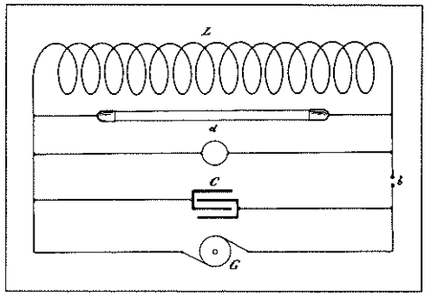

Fig. 3.

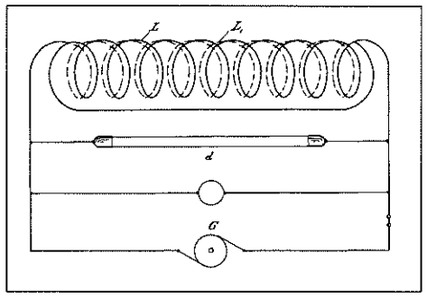

Fig. 4.

as shown in figure 5, this enabling the obtaining of any tension required. After this the arrangement in diagram, figure 6, was adopted as best suitable for the existing municipal circuits. Again the self-explanatory diagram, figure 7, typically illustrates a further improved disposition as used in some of these machines with two or more circuits. A modification of this plan with one continuous contact, common to the two circuits and independent interrupters for each of these allows easy adjustment of the phase of the currents through the primary, which is of practical advantage in some uses of the apparatus. Finally, in diagram, figure 8 is shown the exact arrangement of the parts and circuits of one of these small oscillators with a break similar to that usually employed in connection with induction coils. Although the majority of the preceding arrangements have been described by me before I thought it necessary to dwell on them here in order to present clearly and comprehensively the subject.

A specific result of value in the operation of Röntgen bulbs is obtainable by the use of two circuits linked as shown in figure 7, or otherwise, or entirely independent with two separate primaries. Namely, in the usual commercial bulbs the vacuum gets higher when the current is passed through the primary in a certain direction and

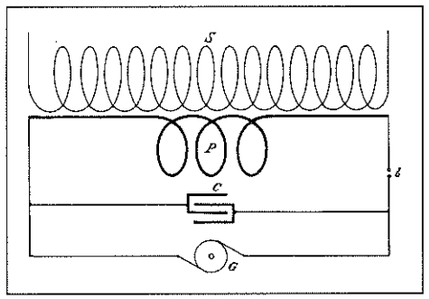

Fig. 5.

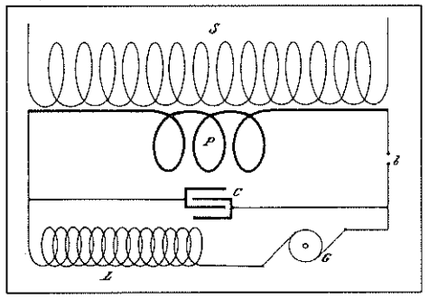

Fig. 6.

is lowered when the direction of the current is reversed. This is a direct consequence of some conditions which, as a rule, are present in the operation of the usual apparatus; that is, the assymetry of the opposite current impulses, the unequal size, configuration or temperature of the two electrodes, or like causes which tend to render unequal the dissipation of the energy from both the electrodes. It should be stated, though, that beyond a certain point, when the electrodes begin to act as entirely independent, the vacuum continues to increase, no matter which way the current is passed through the primary. In the scheme illustrated in figure 7 or in its modifications referred to the trouble attendant upon the operation of ordinary apparatus is practically done away with, as the current through the primary is automatically reversed, and in this manner a tube which is first brought to the proper degree of exhaustion by means of one circuit can be worked for a long time without appreciable increase of vacuum or diminution of effectiveness.

A photograph of one of these finished instruments figure 9, especially adapted to be used in the operation of Röntgen bulbs, or in general as a laboratory appliance in place of the ordinary induction coil gives an idea of the actual arrangement of the parts. The condenser (*C*, figure 8) is contained in a box *B* upon which is mounted in front the motor for controlling the circuits, in this instance simply a coil *L* actuating a spring (*s*), fixed on top of the same. This coil, designated as the charging coil, serves at the same time to raise the pressure of the source to any value desired for charging the condenser. This is an important practical advantage, as it enables to

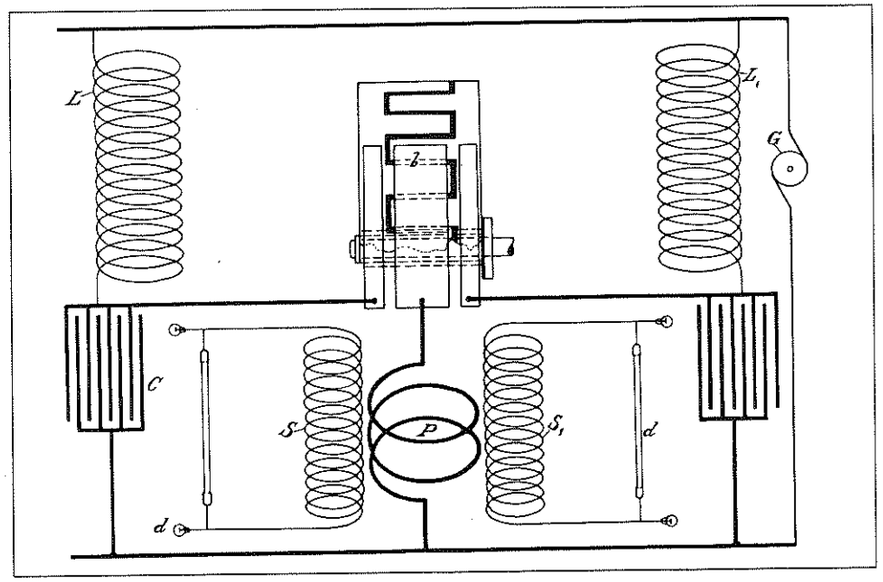

Fig. 7.

reduce the capacity of the latter, so that it need not be more than a few percent of that otherwise needed for an equivalent conversion of energy. Besides, the smaller the capacity, the quicker is the vibration and the shorter need be the high-tension secondary. The discharge circuit *P* surrounding the secondary coil *S′* is formed of a few turns of copper ribbon and mounted on the top of the box behind the charging coil, all connections being as short as possible, so as to reduce as much as it is practicable both the self-induction and resistance of the discharge circuit. On the front side of the box (figure 9) containing the condenser there are mounted the binding posts for connection with the line, two small fuses and a reversing switch. In addition two adjusting screws are provided for raising and lowering the iron core within the charging coil as a convenient means for varying within considerable limits the current of supply and regulating thereby the discharge of the secondary circuit. The instrument with rubber columns carrying the discharge rods, which are visible on the top, dismounted, can be inclosed in a box of 12 × 9 × 6 inches inside measure.

The mode of operation may be explained as follows. At the start, the spring contacts (*cc*, figure 8) being closed and the condenser practically short-circuited, a strong current passes through the charging coil, attracting the armature fastened to the spring and separating the contacts. Upon this the energy stored in the coil, assuming the form of a high-tension discharge, rushes into the condenser, charging

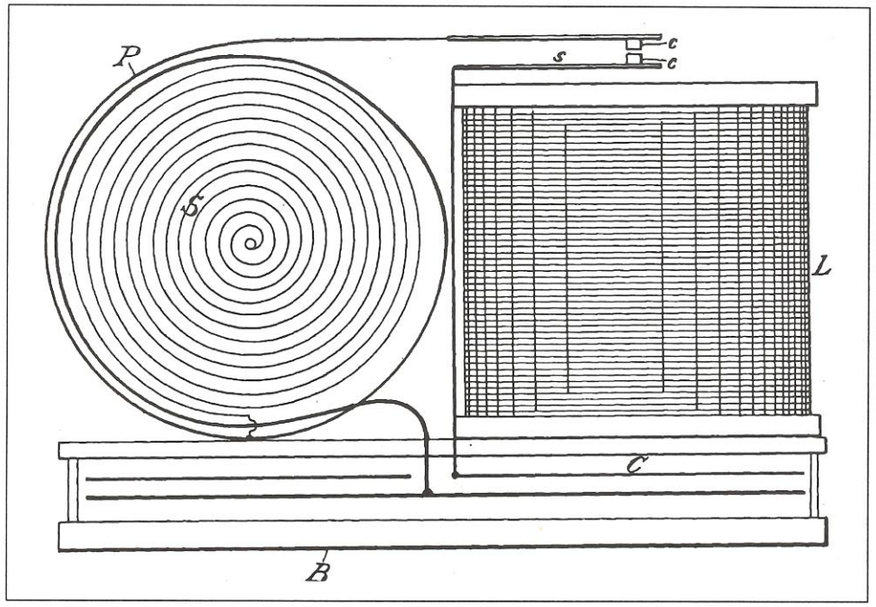

Fig. 8.

the same to a high potential. The current through the coil now subsiding, the attraction exerted upon the armature ceases, and the spring reasserts itself and closes again the contacts. With the closing of the latter the condenser is discharged through the primary or discharge circuit, the constants of which are so chosen that an extremely rapid vibration of the electro-magnetic system, including the condenser and primary coil, results. The currents of very high frequency thus obtained induce corresponding currents of high tension in the secondary. Simultaneously, however, with the discharging of the condenser the current from the source of supply again rushes through the charging coil and energy is stored for the next charge of the condenser, this process being repeated as often as the spring opens and closes the contacts.

Although the instrument contains all the essentials of an ordinary induction coil, it will be seen that its action is entirely different, and the advantages of this new principle over the old are so great as to hardly require any lengthy comment. Merely to convey a true and more complete information I may mention a few of the most important ones. Take, for instance, the economy. The instrument referred to takes on a 110 volt direct current circuit, according to load and adjustment, from 5 to 30

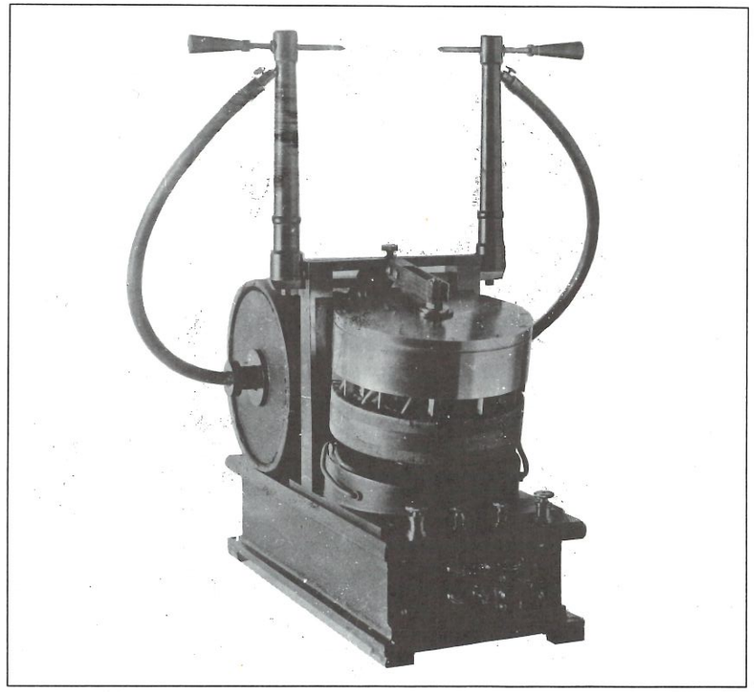

Fig. 9.

watts. It gives a powerful stream of sparks 6 inches in length, but if it be desired this distance can be easily doubled without increasing the energy consumed; in fact, I have found it practicable to produce by the use of this principle sparks of one foot in length, involving no greater expenditure of energy than 10 watts. But in an instrument designed for a variety of uses a departure must be made from a design insuring the greatest spark-length. Of the total energy consumed by the appratus fully 80 percent can be obtained in the secondary circuit. Owing to the small total energy consumed and the efficiency of conversion all parts of the instrument remain cool by long continued working with the exception of the contacts which, of course, are slightly heated. The latter are subject to much less deterioration than is commonly the case, as the condenser is small and moreover, the current from the same does not, like in an ordinary coil, pass simply through the contacts and a few short connections, but has to traverse the primary coil, this reducing the current and diminishing very much the heating effects.

Consider next the advantages of the absence of fine wire in the secondary coil. Owing to the rapidity of vibration of the primary currents comparatively few turns of thick wire give the required pressure in the secondary circuit. To illustrate this feature by a practical experiment I take a simple paper cylinder, wound with only one layer of ordinary magnet wire, forming the secondary coil. In spite of there being only a few turns long sparks, several inches in length, are obtained, when the coil is inserted within or brought near to the discharge circuit of the instrument. A secondary of this form is simplest and best suitable for the production of long sparks, but it is somewhat inconvenient to handle.

The most advantageous features of these instruments lie, however, in the quality of the effects produced, which are the result of the rapidity or suddenness of the discharges obtained. To appreciate this feature we only need consider that a spark of, for instance, 6 inches in length, obtained with an instrument giving half a million vibratons a second, involves maximum pressures which, if produced with ordinary methods, would give sparks of many hundred feet, since the electrical force necessary to vibrate a certain quantity of electricity increases very rapidly, that is, with the square of the frequency of vibration. Therefore, pressures such as these here obtainable cannot be secured in any way by static machines or ordinary induction coils.

Still another feature of a more practical bearing I may illustrate by lighting a vacuum tube from an instrument furnishing currents of a frequency of much over half a million a second. Although the tube has a volume of only about two and a half inches it emits more light than a tube six or seven feet long and one and a half inches in diameter, such as I have shown on other occasions, and that is a tube having sixty times the bulk and taking a proportionately larger amount of energy. So small a tube as this shown could not at all be brought to this luminosity by the use of the ordinary currents without getting soon overheated, and no better test of the increased efficiency of the light production can be had than by producing so high a luminosity in a small tube without undue heating.

Another convenient and advantageous feature of such an instrument will be found in its capability of being operated from alternating as well as from direct current municipal circuits. With the special object in view of enabling their being used to the best advantage on alternating circuits also I have determined the physical constants in a few types to suit circuits of the frequencies usually adopted here, that is 60 or 125 cycles per second.

In the development and practical application of the principle underlying this kind of apparatus one of the greatest difficulties encountered was the insulation of the secondary coils and condensers, particularly of the latter. The stored energy of a condenser is of an explosive nature, and when released suddenly in a way as it is in these instruments it partakes much of the character of explosions of such a body as dynamite, and enormous maximum pressures result, which strain the dielectric layers in the condensers and coils to their utmost. No matter how good and thick an insultation is provided it cannot withstand such strains, if there be even a slight absorption loss caused in any strained portion of the apparatus. An ordinary condenser, insulated as usual by thick layers of mica, which easily stands a few thousand volts of steady or slowly varying pressure, breaks down invariably; and no wonder it does; for, with vibrations of several hundred thousand a second, such a condenser with air-bubbles or cavities of any kind, unavoidable when the usual method of construction is followed, will convert into heat the larger portion of the energy supplied to it. To investigate the flow of an alternating current through a coil with an iron core which is not laminated is hardly less crude than to carry on a research of rapid electrical vibrations with a condenser in which there are cavities or air-bubbles, or in which, in general, air has access to the highly charged conductors. No estimate of the vibration period of an electro-magnetic system can in such a case be made with any accuracy, whereas, when a proper plan of construction is followed and the dissipation of energy obviated, the experimental result closely agrees with the calculated period. By properly building up the condensers and coils I have produced electro-magnetic systems in which a slow vibration, once started, continues a minute or more, this indicating the absence of any serious friction loss. It is important to consider the preceding facts when dealing with standards and instruments of measure. A standard condenser prepared in the ordinary way of mica sheets and tinfoil, while indicating the correct value of capacity when used with a steady or slowly varying potential, will have its measured capacity greatly increased when the variation of potential becomes extremely rapid. In like manner an electrostatic voltmeter with its vanes immersed in air, though a precious instrument with ordinary currents, is practically useless in the measurement of condenser discharges of frequencies of a few hundred thousand a second, its indication being far too low.

In view of the importance of the subject a few words on the process of insulating which has been adopted by me after several years of experimentation, may be of value. One form of apparatus as used by me is illustrated in diagram figure 10. *A* is a tank capable of withstanding great pressure, which is connected to a pump *E* and its reservoir *H* through a condensing reservoir *F*, kept cool by means of the coiled

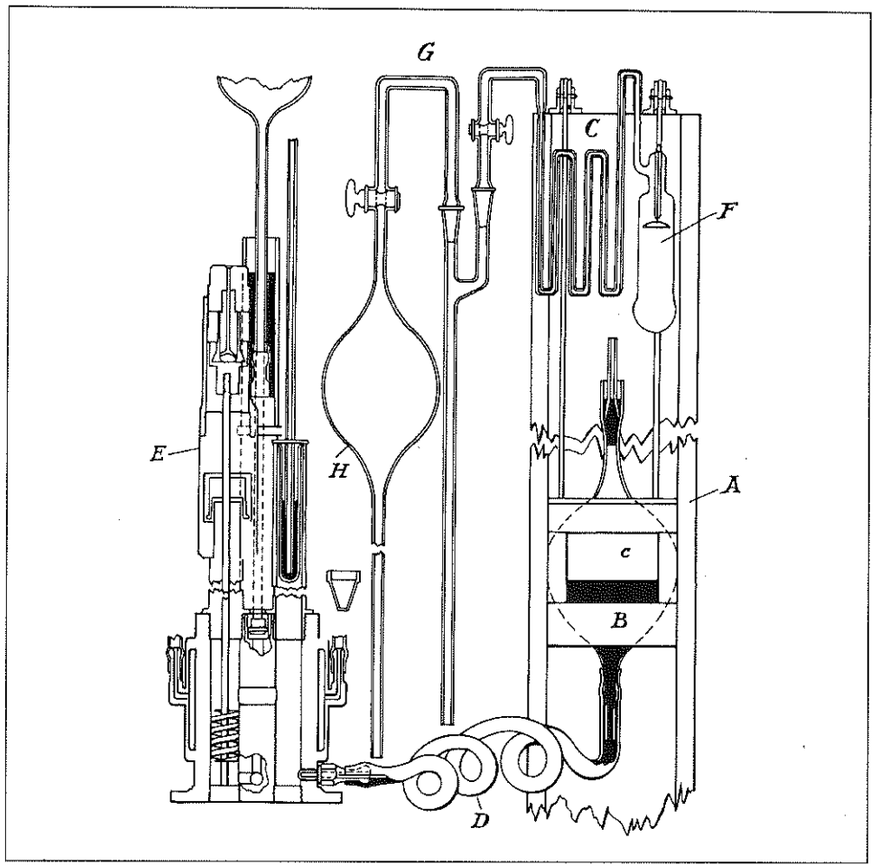

Fig. 10.

pipe *G*. The tank *A* is likewise provided with a coiled pipe *C*, through which either steam or cold water may be passed at will. The condenser is built up of insulating and conducting sheets in any convenient way, several layers of very thin paper being put together, so as to avoid defects which may arise from small holes or punctures. For the same reason it is advisable to mix up the sheets when received from the factory, as a great number of them may be injured at the same place. The condenser *c* having been tested by the application of moderate electrical pressure, as that of a supply circuit of 220 volts, is placed in a tapering vessel *B*. A pipe *D*, reaching to the bottom of this vessel, may be provided, through which the insulation, when liquefied by the heat, may flow in, but this is of less importance. The vessel *B* con-

taining the condenser being next placed in the tank *A* and the top of the latter bolted down, steam is then passed through the coiled pipe *C* and the insulating mass is kept at the right temperature, which is a little above the melting point of the compound, by regulating the steam supply. The pump is now connected with the tank by opening the proper valves and a vacuum of about 29 inches or slightly more is established. When the melted compound has thoroughly permeated the interstices of the condenser, steam is then shut off and cold water passed through the coil *C*. The process of slow cooling being pushed far enough the connections of the pump are reversed and air is forced into the tank *A* with the result of compressing strongly the fluid insulation and forcing it into all interstices. The pressure is preferably maintained until the mass is solidified. The application of the pressure is not only of great advantage because the insulation is forced into the interstices and prevented from shrinking away when cooling, but, in addition, any small gas-bubble which might remain in the condenser and would otherwise at ordinary atmospheric or smaller pressure be fatal to the instrument, is strongly compressed and the danger considerably lessened. The mass in the tank *A* being solidified steam is again turned on the pipe *C* for a few minutes in order to soften the insulation on the periphery and allow the vessel *B* to be lifted out of the tank, whereupon the condenser is taken out of the vessel and the superfluous insulation cut off. In the same manner primary and secondary coils are treated. As insulating material I have found best to use a mixture of beeswax and paraffine of low melting point, about half of each being taken. This gives a tough mass which does not shrink away much from the metal upon cooling. Condensers and coils manufactured in this manner will withstand incredible pres-

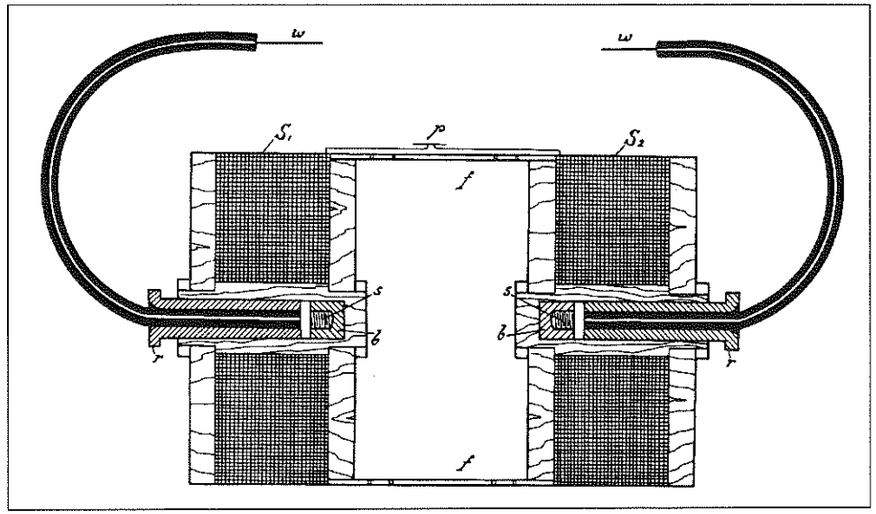

Fig. 11.

sures. Very often in adjusting the primary discharge circuit it may happen that sparks of 3/8 or 1/2 inch dart across the condenser terminals, and yet it will not break down, although the dielectric is no more than a few thousandth of an inch in thickness. I have been unable to detect any increase of temperature whatever in the condenser after long working.

To enable the secondary coils to withstand the effect of the enormous pressures producible with these instruments I have recognized it as necessary to build them on the general plan illustrated in figure 11. The diagram shows two flat spirally wound coils, S_1S_2, which are connected with their outer ends to a contact plate *p* in the proper direction so as to form in reality one single secondary coil, the terminals of which are respectively at the centres of the two wooden spools upon which the two parts of the coil are wound. These spools are held together by a cylinder of thin fibre sheet *ff*, which is sufficiently strong to insure solidity and perforated in order to allow the melted wax to fill the hollow spaces when the coil is put through the insulating process before described. In the centres of the spools are fastened threaded brass bushings *bb* to which the free ends of the secondary coils S_1S_2 are connected and into which can be screwed brass pieces *ss*. The latter are fastened to the ends of the hollow plugs of hard rubber *rr*, through which pass flexible wires *ww*, very heavily insulated with gutta-percha which serve to connect the secondary high potential ends to the discharge rods supported on the top of the instrument (figure 9). It is advisable not to insulate the wires *ww* with soft rubber, for this kind of insulation is soon destroyed by the ozone generated at their surface in consequence of the streamers which will form even if the rubber be very thick. The thickness of the insulation between the superimposed layers of secondaries is practically determined from an approximate estimate of the difference of potential between adjacent layers. Originally I have used heavily insulated wires with from two to four braids, but presently I am using ordinary magnet wire which, in manufacturing the coil, is wound together with a string of a thickness equal to that of the wire. This is a convenient mode of insulating, not requiring specially prepared wire and secures excellent results. The middle of the secondary circuit or common joint of the two coils is connected to the ground, or to the mains, and that generally through the primary discharge circuit, the small contact plate or spring *p* serving to establish the connection, upon the secondary spools being inserted in the primary coil.

The length of each of the secondary coils is so determined that it is somewhat less or equal to a quarter of the wave length of the electro-magnetic disturbance produced in the secondary circuit based, of course, on the practical estimate of the speed of propagation of the disturbance through this circuit. It is obviously understood that the length of the secondary circuit is made to approximate more or less a quarter of the wave length, according to how much allowance is made for the capacity of the circuit under normal working conditions. In the ordinary uses of the instrument as laboratory appliance chiefly for the production of qualitative effects of high tension discharges little allowance is generally made for the capacity of the terminals, but if the apparatus is designed, for instance, for generating a large quantity of streamers

between plates of great surface, or for charging condensers from the secondary or for such uses, then the length of the secondary wire is made much smaller and advantageously an even fraction of a quarter of that wave length which is obtained without any allowance for capacity other than that possessed by the coil. Finally, if secondary currents of comparatively low tension are desired the coil is constructed preferably of one single spool and of only few layers all in close proximity to the primary, so as to increase the mutual induction coefficient and reduce the resonant rise of potential as much as possible. The closure of the magnetic circuit by oxygen at ordinary or high pressure, while of little effect with low frequency currents, is of a remarkable influence with currents of these unusual frequencies, expecially when the conditions are favorable for the occurrence of resonant phenomena and I am anticipating practical uses of oxygen in this connection.

A secondary coil constructed in the manner illustrated in figure 11 has many important advantages, the chief ones being the safety in handling and the facility it affords for obtaining potentials far beyond those producible if the ordinary methods of construction are followed. In order to convey an idea of the pressures obtainable even with so small an instrument as the one described, a photograph of the same in action with two loops of cotton covered wire attached to the discharge rods, is added (figure 12). The outer wire loop was in the experiment only 22 inches in diameter to enable it being properly shown in the print, but it could have been much larger, since two such parallel wires 15 feet long may be stretched from the secondary terminals of the instrument and practically the whole space between them, four inches wide, is seen in the dark covered with fine luminous streamers, that is, a surface of 5 square feet, and yet the energy taken from the supply circuit during the performance is less than 35 watts. To produce with an ordinary transformer such a quantity of these streamers, which may be needed for the manufacture of ozone or similar purposes, would require a considerably greater amount of energy and a more costly apparatus.

These extreme differences of potential obtainable by the use of the principle here involved are the result of the enormous suddenness or rate of change of the primary current impulses. In the ordinary method of varying the strength of the primary current either by alternating the same or breaking the conducting path we are limited to the comparatively insignificant rate of change producible by means of a high frequency alternator or rapid break, but by the use of the condenser discharges there is practically no limit to the suddenness of the impulses, and any potentials and spark-lengths desired can be readily obtained. So, for instance, I have been able to produce, by applying the principle in a peculiar manner, immense electrical pressures, the theoretical maximum value of which can be measured only in many millions of volts, causing showers or continuous streams of thick, thundering sparks to dart out into space to a distance of eight or nine feet from an insulated wire, which behave sometimes like veritable lightning bolts and have afforded to the few who have witnessed them during the last two or three years in my laboratory a spectacle not easily forgotten. Nor is it at all difficult to increase, in a large hall or open space,

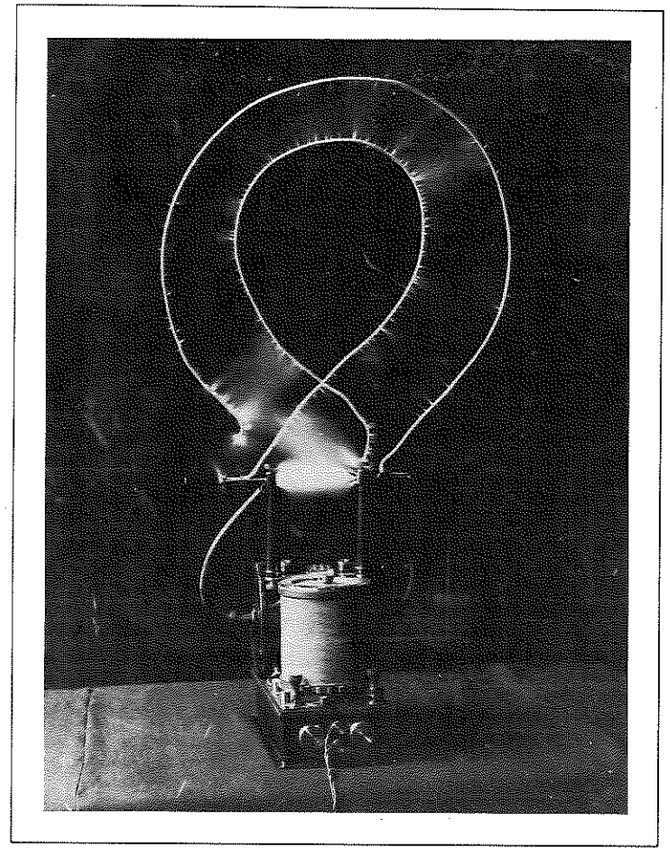

Fig. 12.

many times the potential and sparking distance by the employment of such means and methods.

Although in these oscillators the great suddenness of change in the strength of the currents depends chiefly on the electrical constants of the circuits, some advantages of minor but practical importance may be secured by a proper construction of the devices, used as convenient, though not indispensable, accessories of the system for the purpose of arbitrarily making and breaking the circuits. Accordingly, I have devoted considerable time to their study and perfection, and in connection with the typical arrangements of the circuits illustrated in figures 1, 3, 4 and 5, I have dwelt in my earlier writings on this subject on a variety of such circuit interrupters in vacuum, air and other fluids at low or great pressures.

It has been known long ago, since the investigations of Poggendorff, that, when the vibrator or break of an induction coil was inclosed in an exhausted vessel, the

interruption of the currents was effected with greater suddenness, the vacuous space acting in a certain measure like a condenser, connected, as usual, around the break. My experiments with several kinds of such circuit breakers have led me to recognize that the vacuous space is not exactly the equivalent of a condenser, but rather of an absorbent, the increased suddenness being simply due to the rapid carrying away of the volatilized material forming the arc, and therefore being dependent on the velocity with which the disintegrated matter is carried away and also on the amount of the latter. Thus, with very hard platinum-iridium contacts and small currents there is little difference, but with soft platinum points and heavy currents the influence of the vacuum is well noticeable, while, with mercury or in general easily volatilizable conductors, the diffrence is very great. The size of the exhausted vessel is also of some consequence, the break gaining in suddenness when the vessel is larger. Looking at Poggendorff's observations in this light it appeared clear to me that only a small velocity of the particles composing the arc can be obtained, since the effective pressure, at least with low frequency impulses depending on mechanical means and currents of limited strength which can be passed through the contacts without quickly destroying them, is necessarily only a minute fraction of the atmosphere, being, besides, very materially reduced by the oppositely acting attraction of the parallel current elements of the arc. Pursuing further this train of reasoning it seemed likewise evident that, if an insulating fluid be forced mechanically between the contact points with such velocity that the particles composing the arc were carried away quicker than it was possible with a small pressure producible in the gaseous matter in vacuum, the suddenness of disruption would be increased. This conclusion was borne out by my experiments in which I found that a fluid insulator, such as oil or alcohol, forced through the gap with even moderate velocity, increased very greatly the maximum rate of change of the primary current, and the length of secondary wire necessary for a certain spark length was in some instances reduced to 25 percent of that usually required. The length of the secondary was still further reduced by the use of insulating fluids under great pressure. As regards the suddenness of the current impulse following the closing of the contacts, the introduction of an insulating space or film of greater dielectric strength than that of the air at ordinary pressure though producing a distinct effect, is of small consequence when the interrupter in its operation actually breaks the arc, since the electro-motive force of a battery or municipal supply circuit is generally insufficient to break down an insulating film of even so small a thickness as one thousandth of an inch.

The continued effort to perfect the various automatic contrivances for controlling the supply current has clearly brought out their mechanical limitations and the idea of utilizing the discharges of the condenser as a means for producing, independently of such mechanical devices, the sudden variations of the current, which are needed for many purposes in the arts, appears evermore a happy and timely solution. In this novel process a function of only minor importance is assigned to the mechanical means, namely, that of merely starting periodically the vibration of the electro-magnetic system, and they have no other requirements to fulfill beyond those

of reliability in operation and durability, features which are left to the skill of the mechanic and which, in a fair measure, it was not difficult to attain in a number of types.

Considering, then, that the rate of change of the discharge or primary current in these instruments is made to depend chiefly on the physical constants of the circuit through which the condenser discharges, it is evidently of utmost importance to construct properly the latter circuit, and in the investigations which were carried on with this object in view, several noteworthy observations have been made.

First of all, one draws the obvious conclusion that, inasmuch as the primary coil in a transformer of this kind consists usually of very few turns of copper ribbon of inappreciable resistance, the insulation between the turns should not require much care. But practical experience soon convinces him of his error, for, very often it happens that, owing to an exceptional resonant rise, the difference of potential between adjacent turns becomes so great as to rupture even a very good ordinary insulation. For this reason it was found necessary to treat the primary coils likewise in the manner described, thus securing the additional advantage of stiffness, which results from the expansion of the metal sheets and thickening of the insulating layers during the heating in vacuum and subsequent contraction of the metal in cooling to the normal temperature after the insulation has solidified.

Next the experimenter is surprised when realizing the importance of the proper adjustment of the length of the primary coil and its connections. He is naturally prepared to find that, since the discharge circuit is of small length, the introduction in this circuit of a very small inductance or frictional resistance would produce an appreciable difference in the result obtained as, for instance, in the spark length of the secondary coil. But he certainly does not expect to observe that sometimes as little as a quarter of an inch of conductor more or less would be of a telling effect. To illustrate: It is quite easy to produce with this kind of apparatus a spark of several feet in length, and by merely taking off or adding to the primary an inch of thick copper wire to reduce the spark-length to one half. Observations of this kind impress the experimenter with the importance of the close adjustment of the circuits and accurate determination of their constants. His attention is forcibly attracted to the advantages of reducing as much as it is practicable the self-induction and resistance of the discharge circuit, the former with the object of securing the quickest possible vibraton, the latter chiefly for reasons of economy. He also recognizes the necessity of bringing down to the minimum the length and resistance of all connecting wires. A well constructed discharge circuit in a small instrument, such as the one described, should have no more than five percent of inactive conductor, its resistance should be negligible and the self-induction should be no more than a few hundred centimeters. I have found it almost imperative to use thin copper ribbon in the construction of the primary coils, and with these an observation, which is the most curious of all, has been made. It occurs, namely, that, under certain conditions, the primary coil gets perceptibly cooler by continued working. For a long time this result appeared doubtful, but finally it was positively ascertained and ascribed to an exaggerated Thomson effect, owing to which heat is carried from the primary copper ribbon to the tin foil of the condenser.

It might not appear quite clear at first why the primary discharge circuit is so sensitive to variations of length, for a circuit of any length might be connected to the condenser and, provided that the relation between resistance, capacity and self-induction is such as to satisfy the condition laid down by Lord Kelvin, oscillatory discharge will take place. But it must be remembered that the velocity of propagation of the disturbance in the circuit depends on these quantities, and that the best result is attained when the velocity is such that a stationary wave is formed with a single node which is located generally, but not always, at a point of the discharge circuit or conductor equi-distant from the opposite condenser coatings. Under such conditions the maximum effective pressure at the terminals of the condenser is obtained. But this state of things is only possible when the speed of the propagation through the discharge circuit is such that this circuit is traversed by the disturbance exactly in the time interval needed to complete half of one vibration. Now, since the speed is extreme and the length of the circuit very small, entirely insignificant variations of the length may often produce astonishing changes in the performance of the apparatus. These statements, of course, should not be construed as generally applicable, for they refer only to such cases in which the vibration in the discharge circuit, started by one operation of the circuit controller, does not die out before the succeeding operation of the controller. This may be made clear by a mechanical analogue. Suppose a weighted spring is clamped in a vise and a sudden blow is struck which sets the spring vibrating. Let the vibrations die out and let another blow be delivered. The spring will vibrate again as before, and it matters little what weight is attached to the spring, what the elasticity of the latter or, in general, what its period of vibration, and at what intervals the blows are delivered, the process of conversion of the energy of the blows into the energy of the vibrations will be effected with equal economy, except for secondary causes, immaterial for the present consideration. Exactly so is it with the electro-magnetic system, and in the early stages of development and practical adaptation of the principle underlying the instruments described, I have employed condensers, either ordinary or electrolytic, of very large capacity and have caused them to discharge at comparatively long intervals through a primary circuit of negligible self-induction and resistance, thus producing current impulses which would sometimes reach, at least theoretically, maximum values of as much as 100 000 amperes. A high maximum rate of change in the primary current was thus producible, but, nevertheless, the average rate of change was still small. Considering again the mechanical analogue before mentioned a valuable lesson is at once derived. Looking upon the weighted spring as an appliance for converting energy, both economy and output demand that the vibration of the spring should persist as long as possible and that the blows should be struck as often as it is practicable. To satisfy this twofold requirement the blows must of necessity be delivered while the spring is still vibrating, and now it becomes most important to properly time the blows. Similarly again, in the electro-magnetic system the circuit

controller must operate at definite intervals of time in order to secure the most vigorous vibration with the least supply of energy. In the construction of practical instruments the number of the fundamental current impulses is arbitrarily adopted, the condenser, being prepared by a special process, cannot be adjusted without great inconvenience, and the size and to a certain extent also the turns of the primary coil are likewise determined beforehand from practical considerations. Furthermore, it is desirable, for reasons of economy, not to resort to an otherwise convenient method of adjustment, which would be to insert a variable self-induction in series with the primary coil. These conditions render more difficult the exact adjustment of the various quantities, and I have sometimes found it of advantage to adopt one or other plan, such as will readily suggest themselves. For example, I have used an additional coil wound upon the primary and connected in parallel to the same, or I have completed the adjustments by determining properly the self-induction and capacity of the secondary coil.

In order to facilitate the observation and also to enable the exact determination of the oscillations of electro-magnetic systems as well as of the vibrations or revolutions of mechanical devices, such as the circuit controllers used in connection, it was recognized as indispensable, in the course of these investigations to construct a proper apparatus for such purposes. I determined from the outset to avail myself of what is known as visual synchronism. In this scheme usually a disk or cylinder with marks or divisions, which is rotated with uniform velocity, is illuminated by a periodically varying or intermittent source of light, the divisions appearing stationary in space when the revolutions of the disk are synchronous with the variations in intensity or intermittences of the light-giving source. The chief virtue of such a method evidently resides in the uniformity of the velocity of rotation or eventually in the constancy of the period of the vibration produced. Having been early confronted with the problem of rotating a body with rigorously uniform velocity, which is required in many instances, or with the similar problem of producing a vibration of constant period, I have devoted some energy to the study of this subject, and in the course of time several solutions, more or less practical and satisfactory, have presented themselves.

One of these, for instance, was to produce by means of compressed air or steam, the vibration of a freely movable plunger to which was rigidly connected a coil or core of an electric generator. By the reciprocating motion of the plunger alternating currents were generated which were passed through a condenser or else through the primary of a transformer, in which case the secondary coil of the latter was joined to the terminals of the condenser. Care being taken that the air or steam pressure was applied only during a short interval of time when the plunger was passing through the center of vibration, and the oscillations of the electro-magnetic system, composed of the condenser and generating coil, being properly determined so that fundamental resonance took place, it was found that, under such conditions, the electro-magnetic system entirely governed the vibrations of the plunger and that the variations of the applied fluid pressure, while capable of producing changes in the amplitude, were within very wide limits without any appreciable effect on the period of vibration of the mechanical system, the currents generated being therefore of rigorously constant period. The currents thus obtained were then utilized in a number of ways to produce uniform rotation.

Another way to reach the same result and in a more practical manner was to generate currents of differing phase by a steam engine of special design, in which the reciprocating motion of the work performing plungers and attached magnetic cores or coils was controlled by a freely oscillating slide valve, the period of which was maintained constant by mechanical means or by the use of an electro-magnetic system, similarly as before. A synchronous alternating motor operated by the two or three phase currents thus generated rotated with so uniform a velocity as to drive the wheel-work of a clock with fair accuracy.

Still other solutions of the problems referred to I may mention which, though less satisfactory, have proved sometimes convenient and sufficient for many purposes. For example, a direct current motor with laminated fields or without any iron, was connected in series with a condenser through a commutator or interrupter fastened on the shaft of a light armature. This device was so constructed that it alternately closed and opened the terminals of the condenser, as usual in the instruments before described. The condenser terminals being closed, a strong current impulse passed through the motor, and upon the terminals being opened the discharge current of high tension rushed into the condenser. But the energy and duration of both of these succeeding current impulses, and consequently of all which passed through the motor, were made chiefly dependent on the self-induction of the motor coils and on the capacity of the condenser, and were therefore, with certain limits of variation of the applied electro-motive force, little dependent on the latter, and consequently a motor with a negligible friction loss, operated in this manner, turned with nearly uniform velocity. The latter was the more nearly constant the greater the controlling influence of the electro-magnetic system which, of course, was the most complete when the number of current impulses, the capacity and self-induction were so adjusted that fundamental resonance was maintained. As before stated, in most of these novel instruments described, such adjustments are observed and, whether provided with rotating interrupters or circuit controlling springs, they partake more or less of the virtue of the preceding principle. For this reason the contact springs in these instruments do not fall into harmonics, as they often do in ordinary induction coils operated from supply circuits, where the physical constants are generally such that similar adjustments are impraticable.

It should be remarked that, since a long time, it was known that a direct current motor, driven with currents interrupted at regular intervals, shows a marked tendency to maintaining a constant speed, but by the introduction of a condenser in the circuit and the careful adjustment of the quantities this tendency is very much increased, and for many purposes a sufficiently uniform velocity may be obtained in this manner. Instead of using interrupted currents for operating the motor it is practicable to rotate a separate coil, wound either on the same or on a second armature,

controller must operate at definite intervals of time in order to secure the most vigorous vibration with the least supply of energy. In the construction of practical instruments the number of the fundamental current impulses is arbitrarily adopted, the condenser, being prepared by a special process, cannot be adjusted without great inconvenience, and the size and to a certain extent also the turns of the primary coil are likewise determined beforehand from practical considerations. Furthermore, it is desirable, for reasons of economy, not to resort to an otherwise convenient method of adjustment, which would be to insert a variable self-induction in series with the primary coil. These conditions render more difficult the exact adjustment of the various quantities, and I have sometimes found it of advantage to adopt one or other plan, such as will readily suggest themselves. For example, I have used an additional coil wound upon the primary and connected in parallel to the same, or I have completed the adjustments by determining properly the self-induction and capacity of the secondary coil.

In order to facilitate the observation and also to enable the exact determination of the oscillations of electro-magnetic systems as well as of the vibrations or revolutions of mechanical devices, such as the circuit controllers used in connection, it was recognized as indispensable, in the course of these investigations to construct a proper apparatus for such purposes. I determined from the outset to avail myself of what is known as visual synchronism. In this scheme usually a disk or cylinder with marks or divisions, which is rotated with uniform velocity, is illuminated by a periodically varying or intermittent source of light, the divisions appearing stationary in space when the revolutions of the disk are synchronous with the variations in intensity or intermittences of the light-giving source. The chief virtue of such a method evidently resides in the uniformity of the velocity of rotation or eventually in the constancy of the period of the vibration produced. Having been early confronted with the problem of rotating a body with rigorously uniform velocity, which is required in many instances, or with the similar problem of producing a vibration of constant period, I have devoted some energy to the study of this subject, and in the course of time several solutions, more or less practical and satisfactory, have presented themselves.

One of these, for instance, was to produce by means of compressed air or steam, the vibration of a freely movable plunger to which was rigidly connected a coil or core of an electric generator. By the reciprocating motion of the plunger alternating currents were generated which were passed through a condenser or else through the primary of a transformer, in which case the secondary coil of the latter was joined to the terminals of the condenser. Care being taken that the air or steam pressure was applied only during a short interval of time when the plunger was passing through the center of vibration, and the oscillations of the electro-magnetic system, composed of the condenser and generating coil, being properly determined so that fundamental resonance took place, it was found that, under such conditions, the electro-magnetic system entirely governed the vibrations of the plunger and that the variations of the applied fluid pressure, while capable of producing changes in the amplitude, were within very wide limits without any appreciable effect on the period of vibration of the mechanical system, the currents generated being therefore of rigorously constant period. The currents thus obtained were then utilized in a number of ways to produce uniform rotation.

Another way to reach the same result and in a more practical manner was to generate currents of differing phase by a steam engine of special design, in which the reciprocating motion of the work performing plungers and attached magnetic cores or coils was controlled by a freely oscillating slide valve, the period of which was maintained constant by mechanical means or by the use of an electro-magnetic system, similarly as before. A synchronous alternating motor operated by the two or three phase currents thus generated rotated with so uniform a velocity as to drive the wheel-work of a clock with fair accuracy.

Still other solutions of the problems referred to I may mention which, though less satisfactory, have proved sometimes convenient and sufficient for many purposes. For example, a direct current motor with laminated fields or without any iron, was connected in series with a condenser through a commutator or interrupter fastened on the shaft of a light armature. This device was so constructed that it alternately closed and opened the terminals of the condenser, as usual in the instruments before described. The condenser terminals being closed, a strong current impulse passed through the motor, and upon the terminals being opened the discharge current of high tension rushed into the condenser. But the energy and duration of both of these succeeding current impulses, and consequently of all which passed through the motor, were made chiefly dependent on the self-induction of the motor coils and on the capacity of the condenser, and were therefore, with certain limits of variation of the applied electro-motive force, little dependent on the latter, and consequently a motor with a negligible friction loss, operated in this manner, turned with nearly uniform velocity. The latter was the more nearly constant the greater the controlling influence of the electro-magnetic system which, of course, was the most complete when the number of current impulses, the capacity and self-induction were so adjusted that fundamental resonance was maintained. As before stated, in most of these novel instruments described, such adjustments are observed and, whether provided with rotating interrupters or circuit controlling springs, they partake more or less of the virtue of the preceding principle. For this reason the contact springs in these instruments do not fall into harmonics, as they often do in ordinary induction coils operated from supply circuits, where the physical constants are generally such that similar adjustments are impraticable.

It should be remarked that, since a long time, it was known that a direct current motor, driven with currents interrupted at regular intervals, shows a marked tendency to maintaining a constant speed, but by the introduction of a condenser in the circuit and the careful adjustment of the quantities this tendency is very much increased, and for many purposes a sufficiently uniform velocity may be obtained in this manner. Instead of using interrupted currents for operating the motor it is practicable to rotate a separate coil, wound either on the same or on a second armature,

and to pass the alternating currents generated in this coil through the condenser. It is important for the attainment of a satisfactory result in such cases to determine the constants so that the amound of energy stored in the condenser should be as large as possible.

While a number of such arrangements were readily available, it was found, nevertheless, that they were inadequate to the many different requirements of the laboratory, and accordingly an instrument was devised which is illustrated in figure 13 ab. It has proved itself to be so necessary and valuable an implement in experimental investigations, that its description here may afford useful information. The cut is intended to show a substantial and carefully constructed clock-mechanism with the usual escapement *e*, gearwheels *ggg*, and a one second pendulum *P*. A small shaft *s*, carrying a disk *D* of large diameter, was geared to the clockwork through a pinion *p* of a proper number of teeth, such as to give to the shaft a velocity best suitable for observations. Now, in order to rotate the disk with a uniform velocity, some

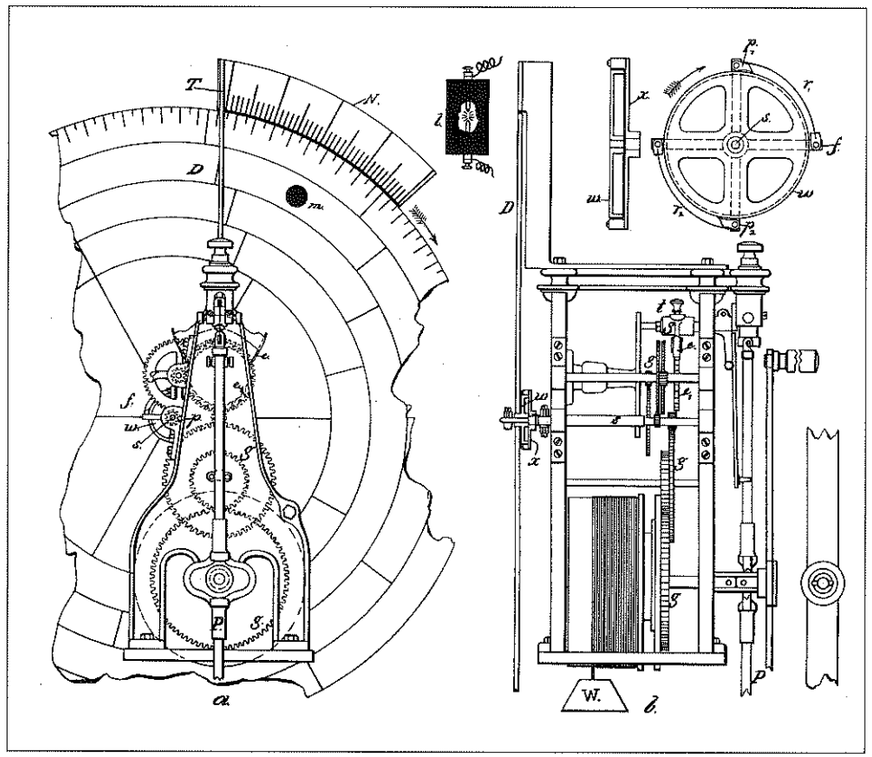

Fig. 13.

difficulties, well known to clockmakers, had to be overcome. The chief of these is due to the fact that the rotation of the shaft *s*, being controlled by the escapement *e*, which, at regular intervals, retards the train of wheels *ggg*, is not effected with uniform, but periodically varying velocity, which may have all values from zero to a maximum, dependent on the driving weight *W*. Owing to this circumstance, when such a disk *D* of large diameter is rigidly geared to any kind of clockwork, it exerts, by reason of the great momentum which it necessarily acquires, a strong reaction upon the pendulum, altering the period of the same more or less, according to the momentum it possesses. This difficulty is known to exist, even in cases in which the step by step movement is practically done away with, as, for instance, in clockworks with centrifugal governors, or circular pendulums, in which slow oscillations are produced by the reaction of the moving mass upon the regulating mechanism. Some clockmakers have proposed an elastic connection between the body driven and the escapement, but this does not do away radically with the difficulty. On the other hand when, in an attempt to overcome this disadvantage of the step by step movement, a quick acting escapement is used, whereby the periods of rest are reduced, and consequently the influence of the momentum of the rotated body upon the period of the pendulum, the result aimed at is but imperfectly attained and, besides, such an apparatus is less suitable for observation. Namely, it will be recognized as desirable for a number of reasons, that the disk *D* should be rotated normally either once or twice a second, according to whether a one or one half second pendulum is used. This being the case the experimenter can render himself easily an account of the constancy of the speed by observing a mark *m* on the disk and noting that it occupies a fixed position in space, relatively to that of the pendulum, in a convenient phase of vibration. Furthermore, the computation of the vibrations is rendered simpler and more convenient under such conditions.

The problem clearly put was then, to rotate a body as the disk *D*, or other body, with any desired but uniform velocity in a way such, that the period of vibration of the pendulum was not much affected, even though the body rotated possessed considerable momentum. An entirely satisfactory solution of this problem was arrived at in the following manner. On the end of the shaft *s*, figure 13b, was fastened a light metal piece *f* in the shape of a cross, carrying on two of its opposite sides pivoted pawls p_1p_2, and on the other two light steel springs r_1r_2, which pressed the pawls gently against the periphery of a washer *w*, which was provided with many very fine teeth or serrations cut sideways, similarly to those of escapement wheels. The washer *w* was arranged to turn very freely on the shaft *s*, and to it was fastened the disk *D*. The pawls p_1p_2 were made with sharp edges to fit in the serrations of the washer *w*, and by these means the disk could rotate freely on the shaft *s* in the direction indicated by the arrows, but its rotation in the opposite direction was prevented by the pawls.

The operation of the apparatus will now be at once understood. On the start the escapement wheel *e* was released by unscrewing the thumb screw *t* and shifting the

sleeve S on its rocking support. The pendulum was next started and when the escapement wheel had attained the normal velocity, the sleeve S was slipped back quickly and fastened, control of the escapement wheel being thus given to the pendulum. The wheelwork and also the shaft s now moved with periodically varying velocity, but the disk D continued to move uniformly, the pawls p_1p_2 slipping on the periphery of the washer w during the periods when the revolution of the shaft s was retarded by the pendulum. When, however, after some time, owing to the very small but unavoidable friction loss in the air and bearings the speed of the disk would slowly diminish and fall below the maximum velocity which the shaft s was capable of imparting to it, then the pawls would give it a slight impulse, and in this manner the disk was kept constantly at the maximum velocity. By each swing of the pendulum the disk would thus receive one impulse, and its velocity depended on the amount of energy imparted to it by each of the succeeding impulses. This amount of energy depended, of course, on the velocity of the shaft s during the period when the escapement wheel was free, and since this velocity was determined by the driving weight, the speed of the rotation of the disk could be varied within certain limits by adjusting the weight. It will be observed that, generally, the disk would rotate considerably faster than the shaft s, but it was easy to adjust the driving weight so that the disk rotated just once by one swing of the pendulum. In producing the rotation by these means the influence of the momentum of the disk upon the period of the pendulum is found negligible. This result, of course, could not be attained by conecting the disk rigidly with the shaft s, even if a quick acting escapement would be used, as before suggested. The uniformity of rotation secured in this way leaves, for all practical purposes at least, nothing to be desired. The apparatus might have been improved by supporting the disk on an independent bearing and, perhaps, also by rotating it horizontally in a jewelled support. But the friction loss was very small, since, by arresting the shaft s suddenly, the disk would generally rotate something like one hundred times or more before stopping, and such improvements were thought unnecessary. The vertical position was, however, chosen, because it was much more convenient for purposes of observation. In order to reduce the weight of the disk D as much as possible, a light frame, consisting of a circular rim with narrow spokes, was cut out of thin aluminum sheet, and black paper glued on the frame, all marks and divisions of the former being, of course, white. I found it convenient to draw concentric circles with a number of marks such that all vibrations within the range of the apparatus could be read off. In addition a segmental piece of hard rubber N, supported on a bar T and properly marked, was used to read fractions or, respectively, take corrections for any irregularity in the rotation during a prolonged period of time. Near the disk was placed a vacuum tube or, in its place, an adjustable spark gap l, which was connected to the secondary of a small transformer, the primary of which was positively controlled by the mechanical or electro-magnetic system the vibrations of which were to be determined. In preparing a spring of the desired period of vibration for one of the instruments described, for instance, the spring was provisorily mounted on the instrument and the latter put in operation. The disk, intermittently

illuminated by the discharges of the secondary coil, was released from the pendulum and rotated until synchronism was attained, the revolutions being computed by observing the white mark m. The constants of the spring were then modified after a simple calculation from the first result, and in the second trial, as a rule, the vibraton was so close as to enable the use of the escapement, the adjustment then being completed, generally by altering the weight of the hammer on the spring until the marks on the disk, by the normal speed of rotation, appeared stationary in space.

The apparatus described in figure 13 will be found very convenient and time-saving in a great many lines of experimentation. By means of the same it is practicable to rotate a body of considerable weight with uniform and adjustable velocity, and it lends itself to the operation of circuit controllers, curve-tracers and all kinds of such devices. It will be found most useful in tracing current or electro-motive force curves and a variety of diagrams, and will afford material help in determining a number of physical quantities. But its most valuable use in the investigation of electrical vibrations is, perhaps, for the purpose of determining exactly the angular velocities of dynamos, particularly of alternators. Among the various quantities which, in alternate current experimentation and practice, one has to determine very frequently, there are some, which even in a laboratory or shop in the midst of the disturbances of a city or factory can be ascertained with sufficient precision, while there are others which can be only approximated, particularly if, as is very often the case, practical methods of measure must be resorted to. So, for example, the close measurement of resistances offers no difficulty, nor does that of currents and electromotive forces, although the degree of exactitude is necessarily smaller; but in determining capacities one is liable to make a considerable error, still a greater one in measuring inductances, and probably the greatest in estimating frequencies. In many places such crude devices as speed counters or tachymeters are still resorted to, and the experimenter is disappointed to realize that the accuracy of his long and painstaking tests is impaired because of his inability to determine exactly the frequency. To make matters worse, very often too, the latter is the largest and most important quantity. In view of these facts a description of the method adopted by me for the determination of angular velocities may be of some value.

The devices commonly used are illustrated diagramatically in figure 14, a and b. On the shaft S (figure 14a) of the generator is fastened a commutator or circuit controller C, provided with any suitable number of segments, eight being shown in this instance. Four of these, 1, 3, 5 and 7 serve to establish the connections of the circuits, while the intermediate ones, 2, 4, 6 and 8 are entirely insulated idle segments. Assuming the generator to be an alternate current machine, the terminals t_1t_2 of the armature winding, or of any desired coil or part of the same, are led through the hollow shaft, as may be the case, and connected to the diametrically opposite segments 3 and 7, while the segments situated at right angles, that is 1 and 5, are connected together through a wire w of inappreciable resistance. Two brushes b_1b_2, supported in an ordinary holder allowing their being shifted in any position, are arranged to

bear upon the periphery of the controller C. These brushes are connected to a circuit comprising a condenser c of proper capacity and a primary coil p, which has but a few turns of very small self-induction and resistance and is joined in series with the condenser.

The operation of the devices is as in the instruments before referred to. When, with the rotation of the shaft S, the brushes b_1b_2 are brought in contact with the segments 1 and 3, the condenser is charged to a potential which can be adjusted at will by shifting the brush holder. The condenser retains a ceratain charge until the brushes b_1b_2 come to bear upon the connected segments 1 and 5, whereupon an oscillatory discharge through the primary p takes place with the result of inducing strong current impulses in the secondary s, which momentarily light up the vacuum tube or spark gap l placed in proximity of the disk D, which is rotated with uniform velocity, as before described. With the rotation of the circuit controller the brushes are again brought in contact with the segments 1 and 3, and the operations are repeated, at each complete revolution of the armature shaft a definite number of impulses being passed through the vacuum tube or spark gap. In the device illustrated there will be only two impulses for each revolution of the armature, but any greater num-

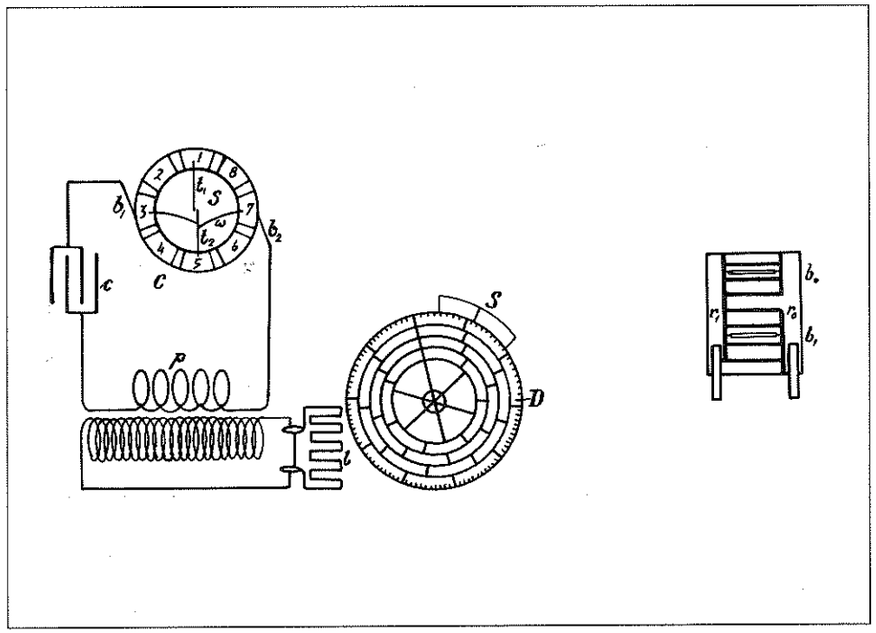

Figs. 14a. and b.

ber may be arranged for by augmenting the number of the segments and connecting them in the same manner. It should be stated that the current impulses, which pass into the condenser whenever the brushes b_1b_2 are on those segments which are connected to the armature coil, ordinarily produce no apreciable effect in the secondary s. This might be the case if the number of segments would be very large and would then be at once noted. The proper adjustment of the circuit through which the condenser discharges is, of course, preferable but not absolutely necessary.

When it is inconvenient to use the armature current, as illustrated in figure 14a, then the controller C is provided with two sliding rings r_1r_2 (figure 14b), upon which are made to bear two additional brushes b_3b_4. The latter are then connected to a direct current source, as the ordinary supply circuit, preferably through a self-induction coil, which serves to charge the condenser to a higher potential. The rings r_1r_2 merely convey to the segments 1 and 3 the current for charging the condenser, otherwise nothing need be changed on the devices.

The marks or divisions on the periphery of the disk D are suitably made so that by the normal speed of the generator they appear stationary in space. This being the case the speed may be at once and easily computed from the number of segments on the controller and that of divisions on the disk and from the speed of the latter. The frequency of the dynamo currents is then given by taking into consideration the number of poles.

In availing himself of this method the experimenter can get the accurate value for the angular velocity, no matter how much the speed of the dynamo may vary, if he only takes the precaution to make his readings for electro-motive force, current, etc., at the instant the marks on the disk are stationary. Should the reading consume more time it is easy to take the correction for any variation by simply observing, with reference to a fixed line on the rubber piece N, the number of divisions which are to be aded to, or deducted from, the speed of the disk.